9812/0010 E1-18-61 COOLER, COMBINATION, RADIATOR/HYDRAULIC, & TRANSMISSION, CHARGED AIR COOLER

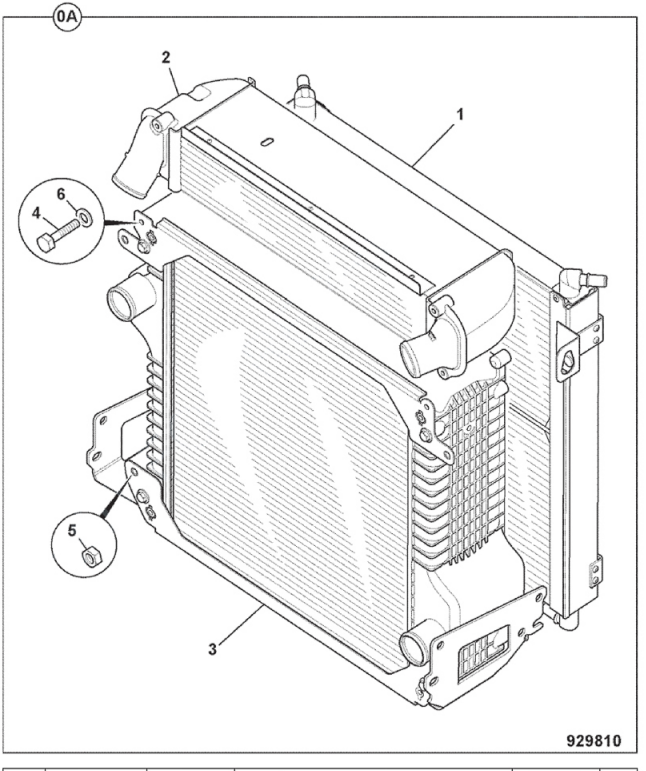

Item	Part #	Change No	Description	Usage Code	QTY
A	128/C1905		Cooler assembly 6row CAC		1
1	:332/C8937		Cooler oil, double 14plates + 21plates		1
2	:332/C8930		Cooler charge air		1
3	:332/C8935		Radiator 6row		1
4	:1316/0303D		Screw		4
5	:1371/0201D		Nut M8 high stress		4
6	:1420/0007Z		Washer Plain		8